AA PACKAGE

LASER DIODE ARRAY

3200W QCW

NORTHROP GRUMMAN

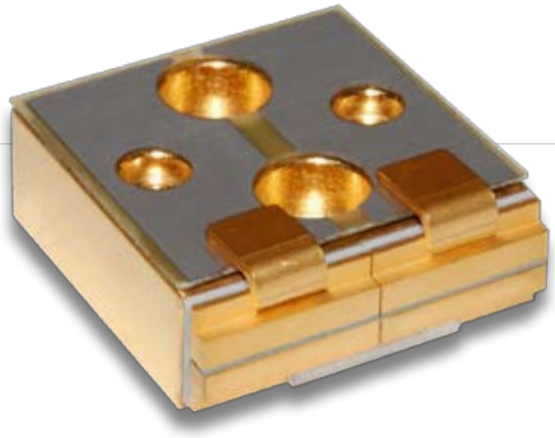

PART NUMBER: ARR186P3200

16-BAR AA PACKAGE

FEATURES AND BENEFITS

- Assembled With Hard Solder & Expansion Matched Materials
- Ideal For Long Pulse And/Or High Duty Cycle Applications
- Standard Bar Pitch Options Include 400 µm, 800 µm, & 1200 µm
- Available Wavelengths: 790-1550nm
- Multi-wavelength Configurations Available
- AA Package Available With Up To 16 Bars For A Maximum Output Power Of 3.2 kW

OPTICAL CHARACTERISTICS

Parameter	Conditions	Typical	Units
QCW Power Output	175A at 25°C Heat Sink	3200	W
Operating Current	3200W at 25°C Heat Sink	175	A
Threshold Current	25°C Heat Sink	15	A
Slope Efficiency	25°C Heat Sink	20.0	W/A
Electrical-Optical Efficiency	3200W at 25°C Heat Sink	57	%
Center Wavelength	3200W at 25°C Heat Sink	808	nm
Wavelength Tolerance	3200W at 25°C Heat Sink	+/-3	nm
Spectral Width	3200W at 25°C Heat Sink	3.0	nm
Wavelength Shift	—	0.25	nm/°C
Beam Divergence FWHM	—	38x7	x°
Beam Divergence FWHM (Lensed)	—	1x7	x°

ELECTRICAL CHARACTERISTICS

Parameter	Conditions	Typical	Units
Series Resistance	25°C Heat Sink	0.032	Ω
Operating Voltage	25°C Heat Sink, 3200W	32.0	V

ABSOLUTE MAXIMUM RATINGS

Parameter	Conditions
Reverse Current	0 A
Reverse Voltage	0 V
Operating Temperature Range	-40°C to 70°C
Storage Temperature Range	-40°C to 85°C

NOTES

(1) These specifications apply for operation at 808nm. Other wavelengths available upon request.

(2) A dry nitrogen environment should be provided by the user when storing and operating at temperatures below ambient dew point.

(3) Fast axis and slow axis lensing options are available for most NG-CEO heat exchanger designs.

3200W QCW

NORTHROP GRUMMAN

OPTICAL CHARACTERISTICS (SAMPLE)

Power vs Current
9 Hz, 150 µsec, 25°C

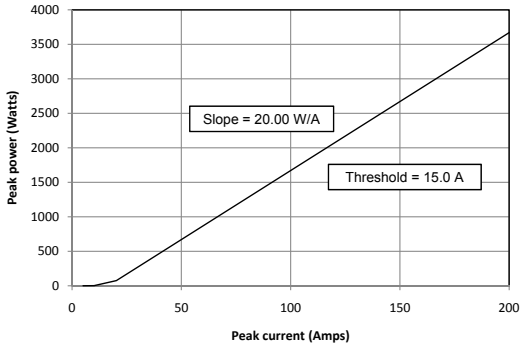

Voltage vs Current
9 Hz, 150 µsec, 25°C

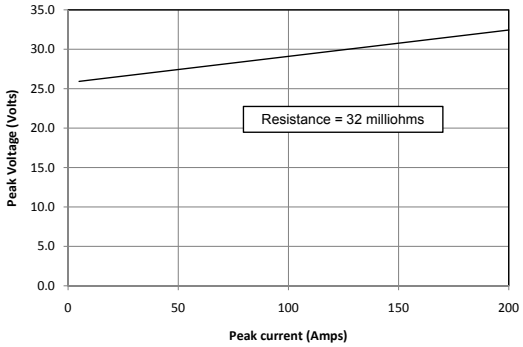

Efficiency vs Current
9 Hz, 150 µsec, 25°C

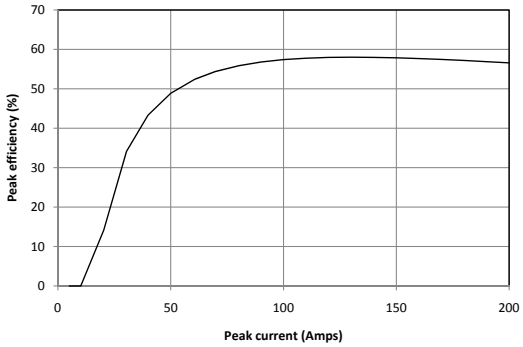

Wavelength Spectrum
3200 W, 176.5 A,
9 Hz, 150 µsec, 25°C

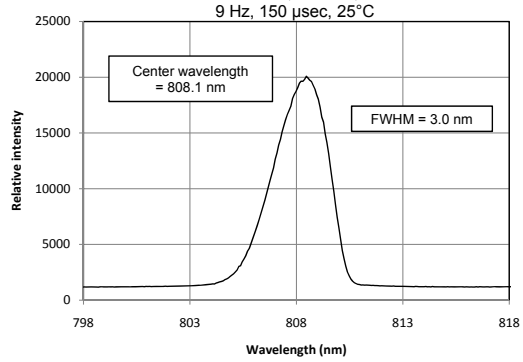

MECHANICAL CHARACTERISTICS

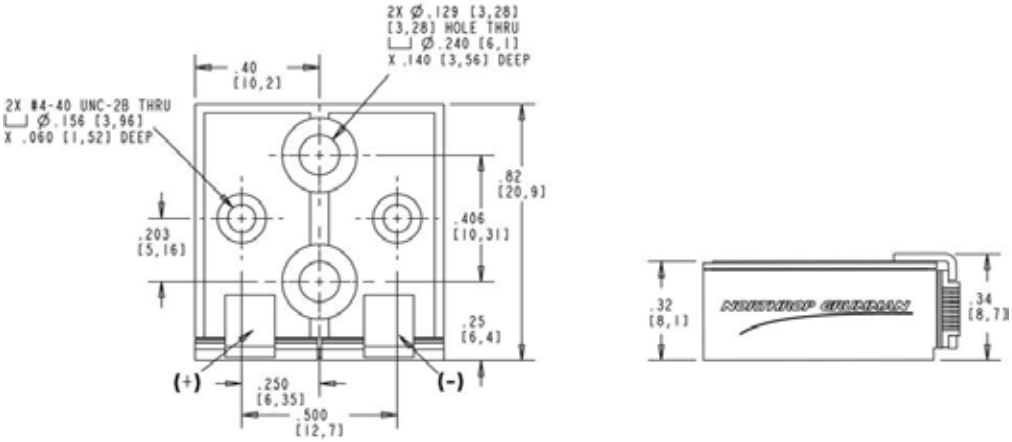

Copyright © 2008 Northrop Grumman Cutting Edge Optronics All Rights Reserved. Northrop Grumman Cutting Edge Optronics reserves the right to change product design and specifications at any time without notice. No license is granted by implication or otherwise under any patents or patent rights of Northrop Grumman Cutting Edge Optronics or others. No responsibility is assumed for the use of these products, nor for any infringement on the rights of others resulting from the use of these products. Information contained herein is believed to be reliable and accurate. Laser diode product components are intended for use in a user-devised end system. However, these products are capable of emitting Class IV radiation. Extreme care must be exercised during their operation. Only persons familiar with the appropriate safety precautions should operate a laser product. Directly viewing the laser beam or exposure to specular reflections must be avoided. Serious injury may result if any part of the body is exposed to the beam. The eye is extremely sensitive to the infrared radiation and therefore, proper eyewear must be worn at all times. Use of optical instruments with these products may increase eye hazard. Always were proper eye protection when operating. This Product is covered by one or more of the following Patents: 5,898,211 | 5,985,684 | 5,913,108 | 6,310,900 | Other US and Foreign Patents Pending. Notes (1) These specifications apply for operation at 808nm. Other wavelengths available upon request. (2) A dry nitrogen environment should be provided by the user when storing and operating at temperatures below ambient dew point.